Engine	Yunnei YN38GBZ1
Gross Power	65 kW (88 hp) @ 2,400 rpm
Net Power	61 kW (83 hp) @ 2,400 rpm
Operating Weight	4,924 kg
Standard Bucket Size	0.8 m^3
Standard Breakout Force	61 kN
Standard Dump Clearance	2,618±50 mm

816C

WHEEL LOADER

LIUGONG

TOUGH WORLD. TOUGH EQUIPMENT.

816C SPECIFICATIONS >>>

ENGINE	
Emission Regulation	Tier 2 / Stage II
Make	Yunnei
Model	YN38GBZ1
Gross Power	65 kW (88 hp) @ 2,400 rpm
Net Power	61 kW (83 hp) @ 2,400 rpm
Peak Torque	285 N·m @ 1,600~1800 rpm
Torque Rise %	17 %
Number of Cylinders	4
Aspiration	Turbocharge

TRANSMISSION	
Transmission Type	Counter shaft-type power shift
Torque Converter	3 element - single stage, single phase
Maximum Travel Speed, fwd	21 km/h
Maximum Travel Speed, rev	21 km/h
Number of Speeds, fwd	2
Number of Speeds, rev	2

AXLES	
Differential Front Type	Conventional
Differential Rear Type	Conventional
Axle Oscillation	11°

STEERING	
Steering Configuration	Articulated
Steering Relief Pressure	14.8 Mpa

BRAKES	
Service Brake Type	Caliper dry disc
Service Brake Actuation	Hydraulic
Parking Brake Type	Shoe / Drum
Parking Brake Actuation	Mechanical

HYDRAULIC SYSTEM	
Main Pump Type	Gear
Main Relief Pressure	18 MPa
Raise	3.8 s
Dump Time	0.7 s
Float Down Time	2.4 s
Fastest Total Cycle Time	6.9 s

LOADER ARM PERFORMANCE with Standard Bucket 0.8 m^3	
Tipping Load - Straight (ISO 14397-1:2007)	4,300 kg
Tipping Load - Full Turn (ISO 14397-1:2007)	3,800 kg
Bucket Breakout Force	61 kN
Maximum Dump Angle at Full Height	45°±1°
Dump Clearance at Full Height Discharge	2,618 mm
Dump Reach at Full Height Discharge	778 mm
Maximum Hinge Pin Height	3,249 mm
Maximum Digging Depth, Bucket Level	40 mm
Bucket Rollback at Ground Level	45°±1°
Bucket Rollback at Carry	51°±1°
Bucket Rollback at Maximum Height	63.5°±1°

BUCKET PERFORMANCE	
Reference Bucket	0.8 m^3

DIMENSIONS	
Length with Bucket Down	5,781 mm
Width Over Tires	1,940 mm
Wheelbase	2,200 mm
Wheel Tread	1,562 mm
Ground Clearance	285 mm
Turn Angle, Either Side	38°
Rear Angle of Departure	25°
Turning Radius, Outside of Tire	4,208 mm
Turning Radius, Center of Tire	3,998 mm
Turning Radius, Bucket Carry	4,569 mm
Width Over Bucket	1,982 mm

TIRES	
Tire Size	16 / 70 - 20

OPERATING WEIGHTS	
Operating Weight	4,924 kg ± 300 kg

SERVICE CAPACITY	
Fuel Tank	95 L
Engine Oil	6.8 L
Cooling System	15 L
Hydraulic Reservoir	78 L
Transmission and Torque Converter	16 L
Axles, each	13 L

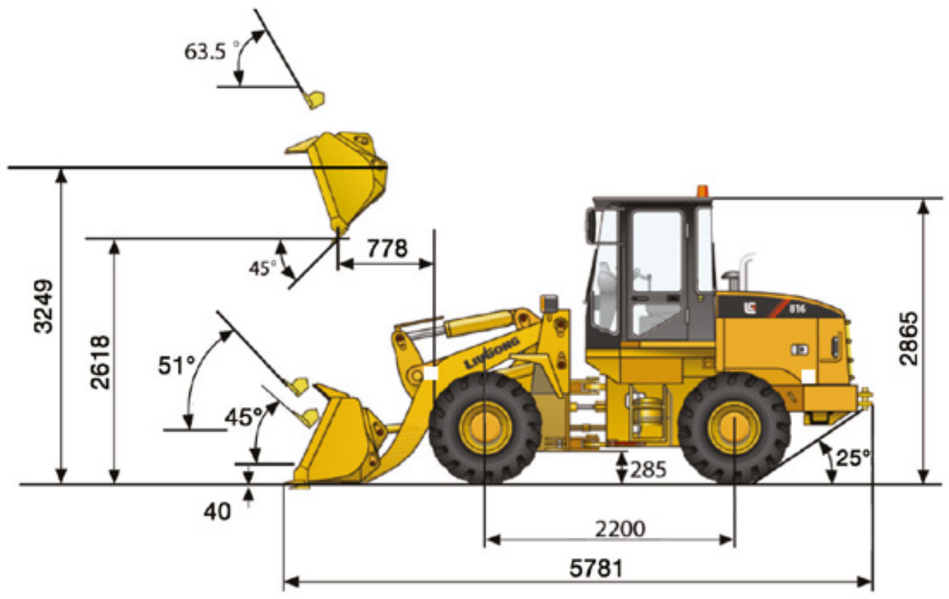

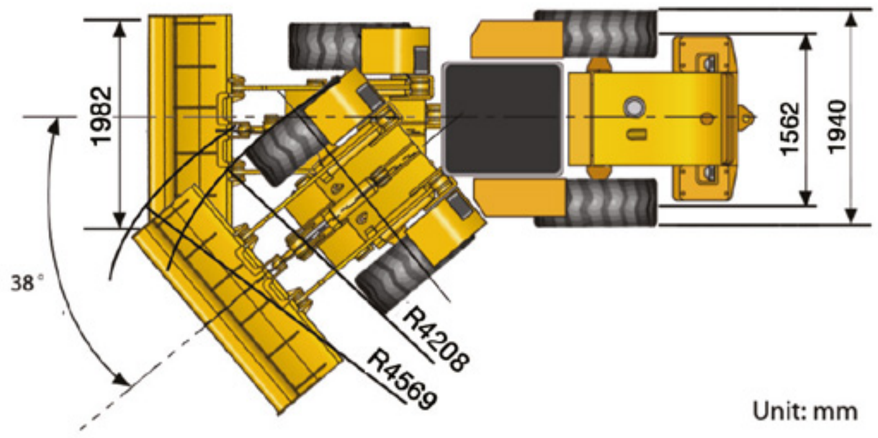

Specifications and designs are subject to change without notice. Machines shown may include optional equipment. LiuGong standard and optional equipment may vary from region to region. Please consult your LiuGong dealer for information specific to your area.

PROBESCO

KEM Tower Lantai 15, Jl. Landasan Pacu Barat Kav. 2 B-10, Gunung Sahari Selatan, Kemayoran Jakarta Pusat 10610
Phone : +62 21 6570 4111 (Hunting) | Fax : +62 21 6570 4110 | Email : info@probesco.com

Jakarta | Surabaya | Medan | Pekanbaru | Padang | Jambi | Lampung | Palembang | Bengkulu | Balikpapan | Banjarmasin | Pontianak | Sampit | Samarinda | Tarakan | Ketapang | Makassar | Manado | Timika | Kendari